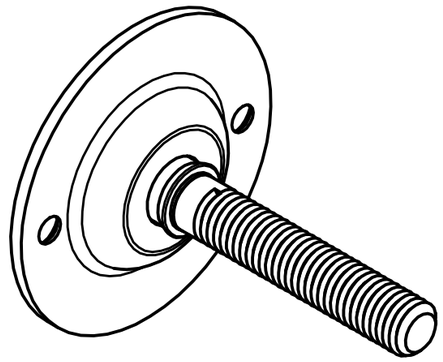

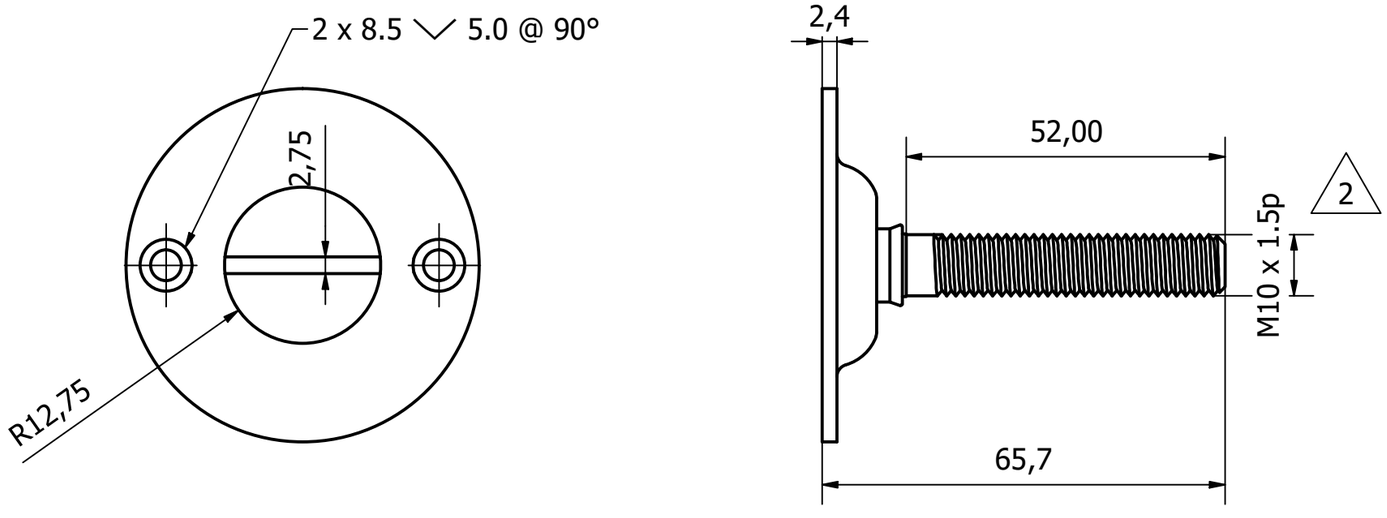

REV	DESCRIPTION	DATE	APPROVED
1	VALIDATION COMPLETE	23/11/16	A.P
2	AMENDED THREAD SIZE	12/05/2022	S.R

GENERAL TOLERANCES ON LENGTHS

0.5 - 6 ± 0.1mm
6 - 30 ± 0.2mm
30 - 120 ± 0.3mm
120 - 400 ± 0.5mm
400 - 1000 ± 0.8mm
1000 - 1200 ± 1.2mm
2000 - 4000 ± 2.0mm

ALBERT JAGGER LTD
GREEN LANE
WALSALL
WEST MIDLANDS
WS2 8HG
PHONE: 01922 471000
FAX: 01922 648021

THIS DRAWING & THE DESIGN SHOWN ARE THE PROPERTY OF ALBERT JAGGER LTD AND MUST NOT BE USED OR COPIED BY A THIRD PARTY WITHOUT PERMISSION

DRAWN BY	CHECKED BY	THIRD ANGLE PROJECTION	SCALE	MATERIAL	MASS	FINISH	Date	ALL DIMS IN MM UNLESS STATED DO NOT SCALE	A3
U.F	A.P		1 : 1	Steel, Mild	0.104 kg	Z/C PASSIVATE	21/11/2016		

albert Jagger

FASTENER - MALE PART - M10 x 48 THREAD

2172-101	Edition 2	Sheet 1 / 1